Micropulse transducer

BTL5-E10-M4250-K-SR32
Order code: BTL0JM8

BALLUFF
sensors worldwide

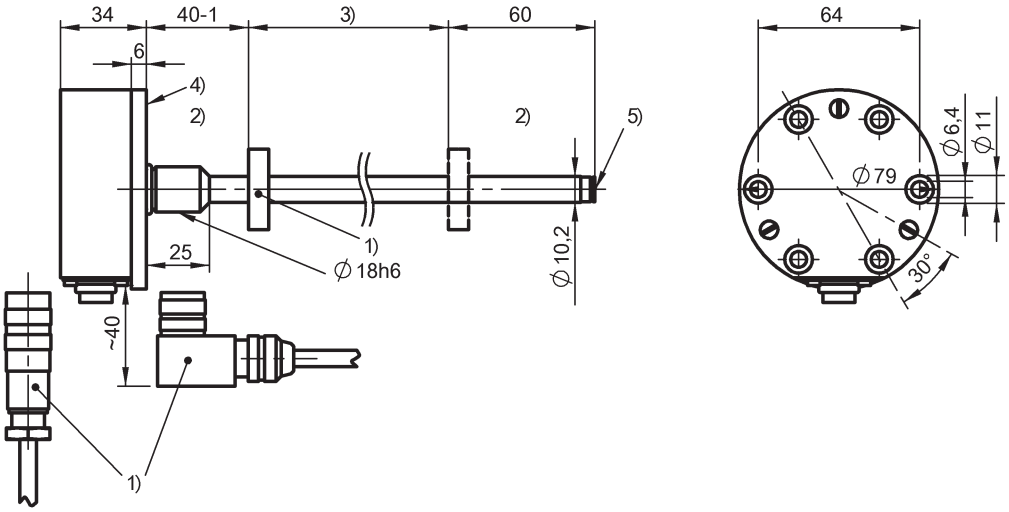

1) Not incl. in scope of del. 2) Unusable area 3) Nom. stroke = Meas. length 4) Mounting surface 5) Internal thread M4x4/6 deep

- **Series Compact Rod**
- **Analog interface, current**

General attributes

Approvals / Conformity	CE cURus
Enclosure Type per IEC 60529	IP67 (with connector)
Generation	Generation 5
Polarity reversal protected	Yes

Electrical attributes

Connection type	Connector
Current draw (at 24 V DC)	≤ 150 mA
Error signal Ia rising	≤ 3.2 mA
Error signal Ua falling	≥ 10.2 V
Error signal Ua rising	< 0 V
For dynamic loop applications	No
Inrush current	≤ 3 A / 0.5 ms
Interface	Analog interface, current
Interface group	Analog
Load resistance RL max.	≤ 500 Ohm
Non-linearity max.	±0.02 % FS
Operating voltage UB max. DC [V]	28.0 V
Operating voltage UB min. DC [V]	20.0 V
Output signal	4…20 mA
Overvoltage protected	Yes
Potential isolation	No
Ripple	0.5 Vpp
Voltage resist (GND – housing)	500 V DC

Mechanical attributes

Nominal stroke	4,250 mm
Ambient temperature Ta max.	85 °C
Ambient temperature Ta min.	-40 °C
Cable/connector out	Radial
Connector type	M16
Diameter of outer tube	10.2 mm
E module	200 kN/mm²
EN55016-2-3 (emission)	Class A
EN60068-2-27 (shock)	100 g / 6 ms
EN60068-2-29 (contin. shock)	100 g / 2 ms
EN60068-2-6 (vibration)	12 g, 10…2000 Hz
EN60068-2-64 (noise)	5 g, 10…2000 Hz
EN61000-4-2 (ESD)	Severity Level 3
EN61000-4-3 (RFI)	Severity Level 3
EN61000-4-4 (Burst)	Severity Level 3
EN61000-4-5 (Surge)	Severity Level 2
EN61000-4-6 (HF fields)	Severity Level 3
EN61000-4-8 (magnetic fields)	Severity Level 4
Flange material	Stainl. steel 1.4404 or 1.4571
Housing material	Stainless steel 1.4305
Mounting type	Flange with 6 holes
Null point	40.0 mm
Number of poles	8
O-ring material	Viton
Offset mounting surface	Yes
Outer tube material	Stainless steel 1.4571
Outer tube wall thickness	2.0 mm
Pressure resistance	≤ 600 bar
Relative humidity	< 90 %, non-condensing
Repeat accuracy	0.66 µA
Resolution	≤ 0.2 µA
Sampling rate (length-depend.)	1 kHz, standard
Storage temperature max.	100 °C
Storage temperature min.	-40 °C
Style	Series Compact Rod
TK, typ. (at 50 % of 500 mm)	≤ 35 ppm/K
Version	Type K
With O-ring	Yes
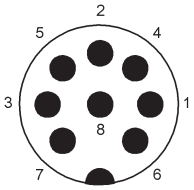
Pin	
1	4...20 mA
2	GND output
3	NC
4	NC
5	NC
6	GND
7	+24 V DC
8	NC